Lincoln

1600 Series Impinger® Low Profile Conveyorized Oven

1600 Series Impinger® Low Profile Conveyorized Oven

Models

- ☐ 1600-000-U
- ☐ 1601-000-U
- ☐ 1621-000-E
- ☐ 1622-000-U
- ☐ 1623-000-U
- ☐ 1624-000-N
- ☐ 1628-000-N
- ☐ 1629-000-N
- ☐ 1633-000-E
- ☐ 1634-000-E
- ☐ 1635-V00-E
- ☐ 1636-V00-E

Lincoln *Impinger* Conveyor Ovens are the premier continuous cook platform for the food service industry. Using the latest advancements in air impingement technology, *Impinger* ovens allow for rapid heating, cooking, baking, and crisping of foods, typically done two to four times faster than conventional ovens.

Lincoln IMPINGER® FASTBAKE

Benefits

Faster Bake Times

- Improved Response to Customer
- Advanced Air Impingement Enhances Product Quality and Uniformity
- Optional FastBake Technology Reduces Cook Time by Up to An Additional 35% With No Food Quality Loss or Noise Increase

Easier Operation

- Digital Controls with Single On/Off Switch
- Microprocessor Controlled Bake Time/Conveyor Speed
- Locked Setting to Prevent Unintended Changes
- Fluorescent Display Indicating Temperature, Belt Speed, Thermostat, and Diagnostic Messages

Easier Cleaning

- Front Door for Finger Access and Removal
- Removable Conveyor Through Side Opening

Unparalleled Support

- Customer-specific Finger Setup for Menu Flexibility
- Research and Applications Team Help Achieve Ideal Cooking Results
- Manitowoc Star Service Committed to Owner Satisfaction

Specifications

General

Stainless Steel Top, Front and Sides
40" (1,016 mm) Long Baking Chamber
Front Removable Fingers
Stackable Up To Two High
Includes Oven Start-Up/Check-Out by Manitowoc STAR Authorized Service Agent

Conveyor

32" (813mm) Wide x 73" (1,854mm) Long
Side Removable
Product Stop
One to Thirty Minute Cook Time
Reversible
Indirect Drive with AC Motor

Cooking

Customer Specific Finger Setup
Temperature Range 250°F to 600°F (127°C to 316°C)
Front Loading Glass Access Door with Cool to the Touch Handle
Digital Control Panel

Optional

FastBake Technology Reduces Cook Time by Up to An Additional 35% with No Food Quality Loss or Noise Increase
Entry and Exit Shelves
Flexible Gas Connector
Split Belt

18301 St. Clair Street
Cleveland, OH 44110

Tel: 888-417-5462
Fax: 800-285-9511
E mail: info@lincolnfp.com

www.lincolnfp.com
LIN_5932 10/31/16

Manitowoc Foodservice

Lincoln

Gas Supply Pressure Recommendations

Gas Type	Supply (Inlet) Pressure (mbar)	Recommended Minimum Gas Pipe Size
Natural	7-14" WC (2.2 kPA / 22.4 mbar - 3.5kPa / 34.9 mbar)	2" (51 mm)
LP	11-14" WC (2.7 kPa / 27.36 mbar - 3.5 kPa / 34.9 mbar)	2" (51 mm)

*Gas supply pressures are dependent on local gas type and on all applicable local codes. Agency approved flexible connection to each oven must be minimum¾" (19 mm) NPT and length must not exceed six (6) feet (1829 mm).

Electrical Service

Each oven deck requires voltage, phase and hertz as indicated by model number. Neutral must be grounded at electrical service and receptacle properly polarized. Gas 120V units have a cord with NEMA 5-15 plug. All other models have terminal block connections. It is recommended that a separate circuit breaker be provided for each oven deck.

Recommended Minimum Clearances

Rear of oven to combustible surface: 6" (152 mm). Clearance on each side from other cooking equipment: 24" (610 mm). Clearance required to remove conveyor for cleaning: 11' (3553 mm).

Warranty

All new *Impinger* ovens installed in the United States and Canada come with a one (1) year parts and labor warranty starting from the date of start-up/check-out. All ovens installed in locations other than the US and Canada are warranted for one (1) year parts and ninety (90) days labor starting from the date of start-up/check-out. Start-up/check-out must occur within 24 months of date of manufacture.

General Information

	Length	Depth	Height Single	Height Double Stacked	Height Triple Stacked
All 1600 Models	80" (2032 mm)	60 1/2" (1537 mm)	44 1/8" (1121 mm)	63 3/8" (1610 mm)	66 3/8" (1686 mm)

Model Number	Agency	Utility	Input Rate	Voltage	Hertz	Phase	Supply
1600-000-U	UL EPH/CSA	Natural	110,000 BTU 32.2 kW (116 MJ)	120	60	1	3
1633-000-E	UL EPH//AGA/CE	Natural		230	50	1	3
1635-V00-E	UL EPH	Natural		220	60	1	5
1601-000-U	UL EPH/CSA	LP		120	60	1	3
1634-000-E	UL EPH/AGA/CE	LP		230	50	1	3
1636-V00-E	UL EPH	LP		220	60	1	5
1621-000-E	CE	Electric	22 kW	400/230	50	3	5
1622-000-U	CUL/UL/UL EPH	Electric		120/208	60	3	5
1623-000-U	CUL/UL/UL EPH	Electric		120/240	60	3	5
1624-000-N	UL EPH	Electric		120/220	60	3	5
1628-000-N	UL EPH	Electric		380/220	50	3	5
1629-000-N	UL EPH	Electric		415/240	50	3	5

NOTE: Panel setups are added as kit numbers to the end of the model number to complete the oven order; (Example: 1600-000-U-K1819 is a 1600-000-U with standard setup, left to right.)

Lincoln

1600 Series Impinger® Low Profile Conveyorized Oven

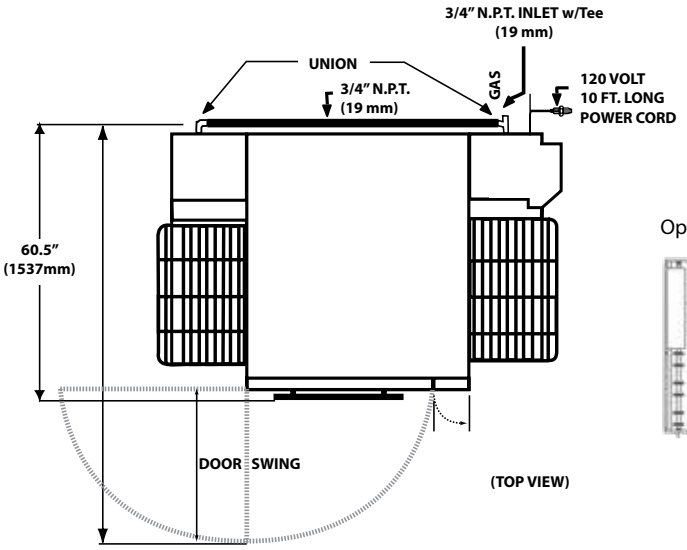

Conveyor Opening: 3 3/8" (85.7 mm)

Optional Split Belt (50/50):

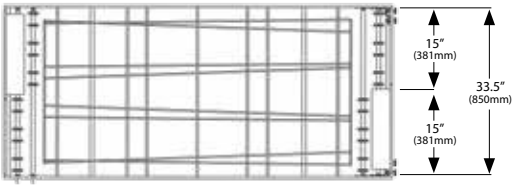

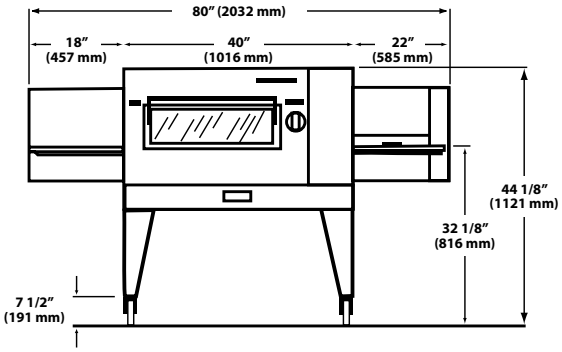

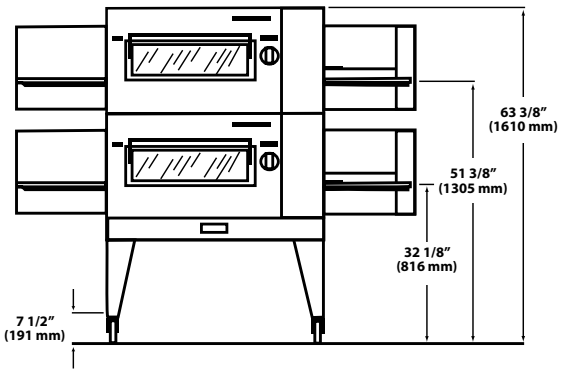

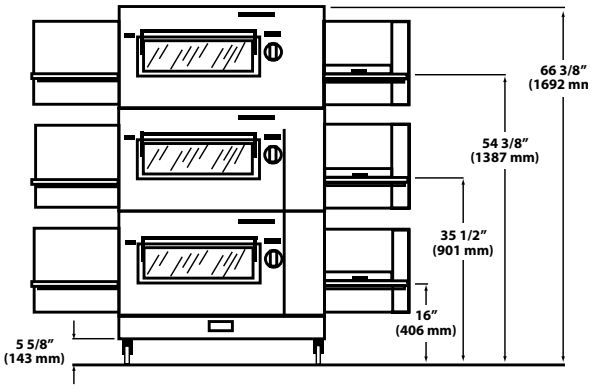

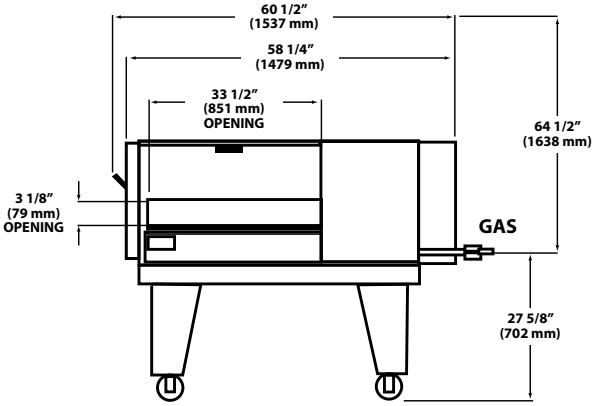

NOTE: Specifications subject to change without notification.

Lincoln

Capacity Estimates | Pies Per Hour

	BAKE TIME								
Pie Size	**3 min.**	**3½ min.**	**4 min.**	**4½ min.**	**5 min.**	**5½ min.**	**6 min.**	**6½ min.**	**7 min.**
12" (30 cm)	182	155	135	120	108	99	90	84	78
14" (36 cm)	115	99	87	88	69	63	58	53	50
16" (41 cm)	101	87	76	67	61	55	51	47	44

Ventilation Requirements

Ventilation is required. Local codes prevail. These are the "authority having jurisdiction" as stated by the National Fire Protection Association, Inc., in NFPA 96-1994. Estimates of CFM requirements can vary from 2400 to as high as 6000 CFM exhaust. In all cases the ambient temperature around the oven must not exceed 95°F (35°C) when the oven is operating. **This information is shown as a guideline for ventilating the Impinger® 1600 Ovens.**

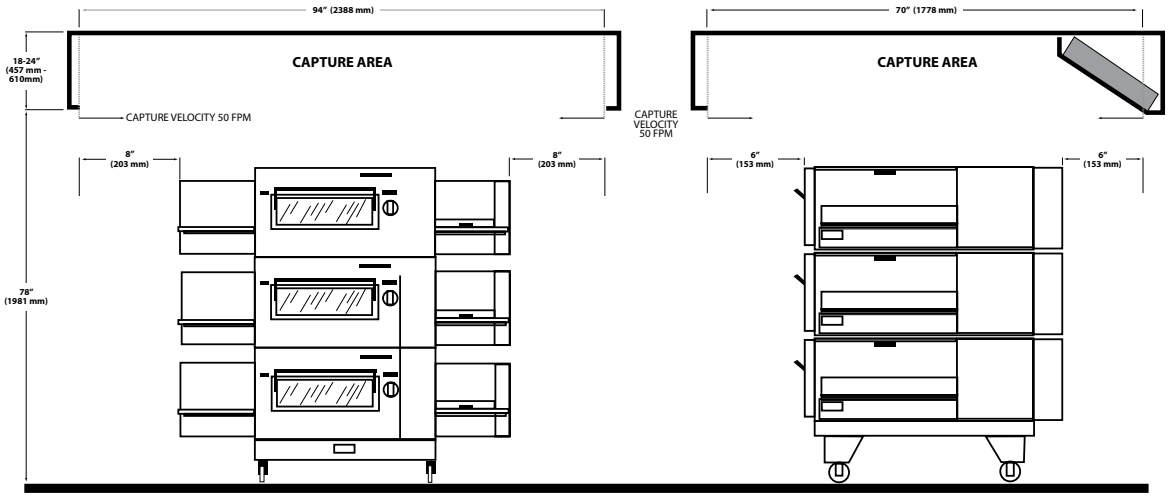

1. Dimensions shown are for ovens without long extension shelves. **The outside end of the conveyor frame must be a minimum of eight (8) inches (203 mm) inside the canopy as shown.**
2. **The capture velocity across the lower edge of the canopy is to be 50 FPM at sides and front.**
3. Use filters at rear exhaust area of the hood, as shown. Do **not** just put an opening into a 4 sided canopy.
4. The ovens are to be centered in the canopy space left-to-right and front-to-back if possible.
5. A six (6) inch space at rear of oven is recommended for utilities.
6. Use of a Type I or Type II application and overall final installation is determined per local codes.
7. **Recommended 2400-3000 CFM exhaust**, typical, or higher per local codes; as a guideline to obtain adequate capture velocity.
8. **Recommended 80% of make-up air provided outside of the canopy** through perforated metal diffusers directed straight down... **not at the oven**; located at front , side or both.
9. **Room air diffusers must not be directed onto the oven and should be positioned a minimum of three (3) feet from the perimeter of the hood to keep airflow from affecting the oven.**

NOTE: Specifications subject to change without notification.

18301 St. Clair Street
Cleveland, OH 44110

Tel: 888-417-5462
Fax: 800-285-9511
E mail: info@lincolnfp.com

www.lincolnfp.com
LIN_5932 10/31/16

Manitowoc Foodservice

©2016 Manitowoc / Printed in the U.S.A.