Item: _____

Quantity: _____

Project: _____

25 lb. Countertop Deep Fat Fryer

Royal Series

Models: ☐ RCF-25

RCF-25

Gas Type: ☐ Natural ☐ LP

Elevation (if above 2000 ft.): _____

Standard Features

- All stainless steel front and sides
- 25 lb capacity stainless steel tank assembly
- 14” x 14” frying area
- In-shot burners rated at 18,000 BTU/hr each
- Millivolt control system with 100% safety shut off
- Thermostatic control with 200º- 400º F range
- Twin fry baskets with plastic coated handles for ease of handling
- 1¼” full port drain valve
- 4” high adjustable heavy duty legs
- Five year limited (prorated) warranty on S/S tank

Options and Accessories

- ❑ Stainless steel tank cover
- ❑ Stainless steel side splash guard

C US SANITATION MADE IN U. S. A.

2 YEAR LIMITED, PARTS AND LABOR WARRANTY

25 lb. Countertop Deep Fat Fryer

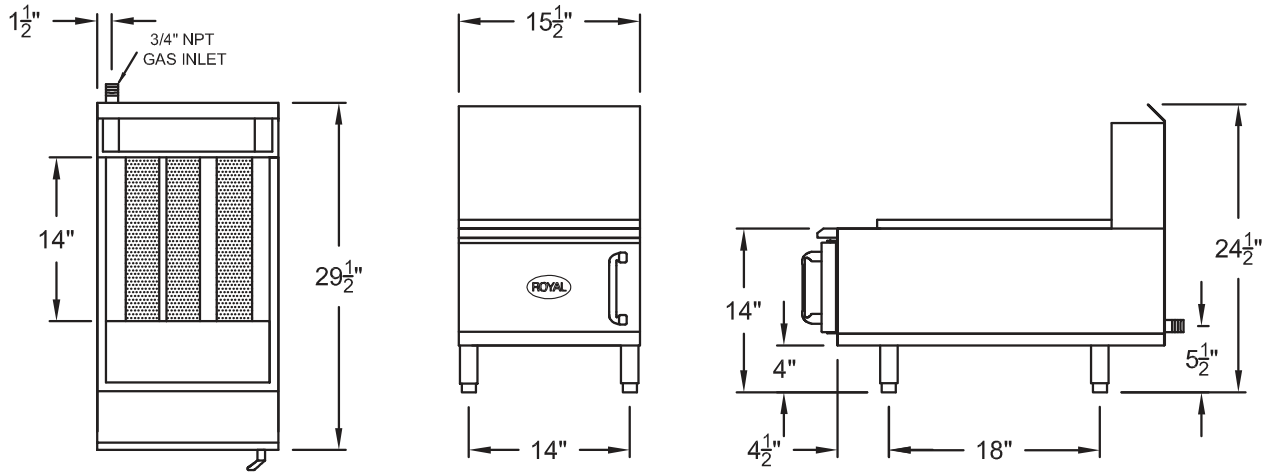

Model Number	Cooking Area	Number of Burners	Total BTU	Ship Weight
RCF-25	14” x 14”	3	54,000	80 lbs.

Notes:

- **Burner rated at 18,000 BTU/hr**

Gas Connection:

3/4” NPT on the left hand rear of the appliance.

No external pressure regulator required.

Specify type of gas and altitude, if over 2,000 feet, when ordering.

Gas Pressure:

4” W.C.	Natural Gas
11” W.C.	Propane

Clearances:

	Combustible	Non-Combustible
Rear	6”	0”
Sides	6”	0”

Due to continuing product development to ensure best possible performance, these specifications are subject to change without prior notification.

Royal Range of California, Inc.

3245 Corridor Dr. • Eastvale, CA 91752 • (800) 769-2414 • (951) 360-1600

Fax: (951) 360-7500 • www.royalranges.com • sales@royalranges.com